# 8250 Kosa spalinowa

## Dokumenty

Rozrusznik kpl.

Gaźnik WYJ-205A

Gaźnik WYJ-227A

Napęd

Akcesoria

Silnik

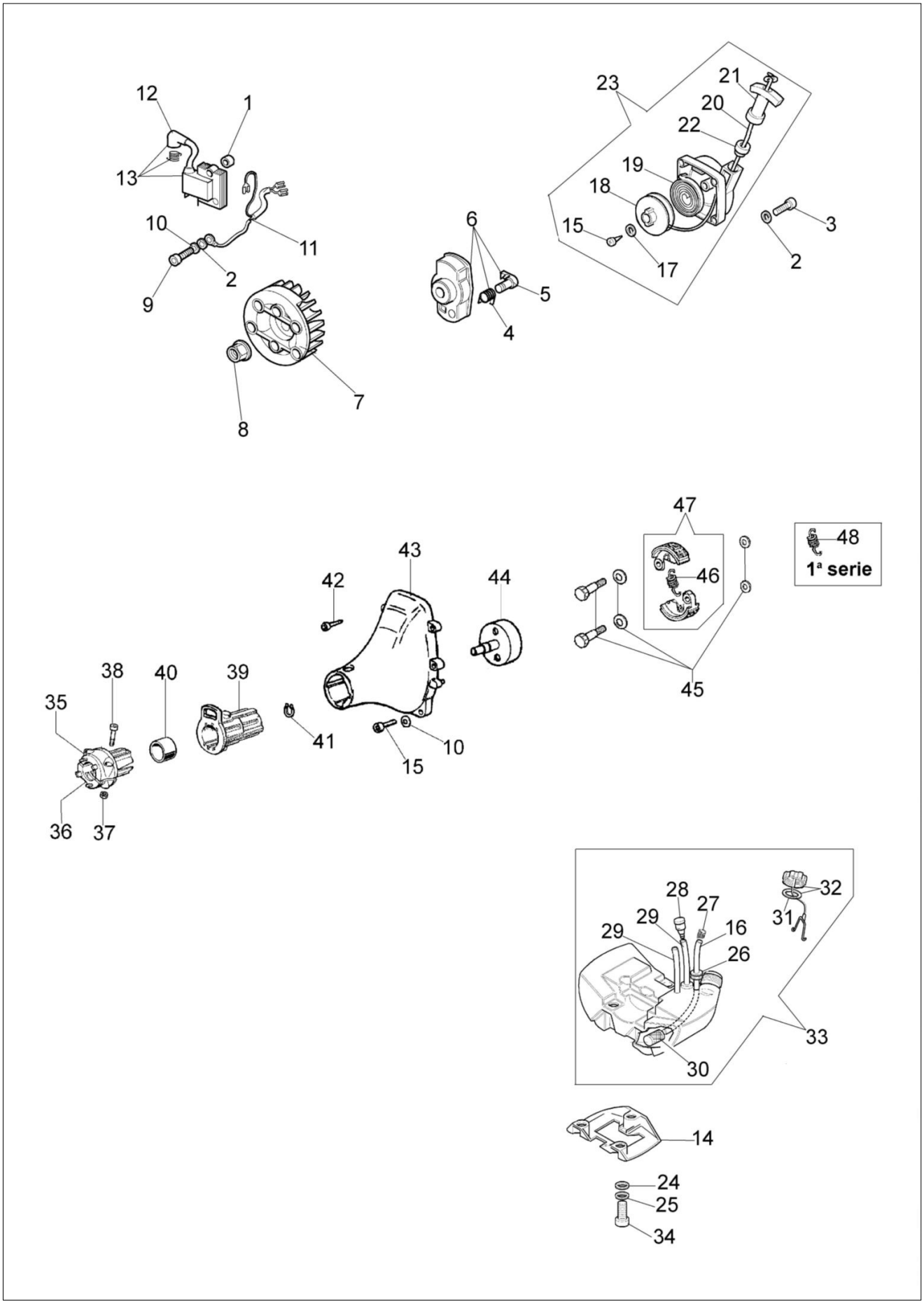
12
1
13
10
11
2
9
7
8
6
5
4
23
21
20
22
19
18
15
17
3
2
47
48
1ª serie
46
43
42
44
45
38
40
39
35
41
10
15
36
37
28
27
32
29
16
31
29
26
33
30
14
24
25
34

# Ilustracja Rozrusznik kpl.

| Znak | Ilosc | Kod artykul | Opis | Waznosc od | Waznosc do | Notakt | Biuletyny |
|---|---|---|---|---|---|---|---|
| 1 | 2 | 50070148A | Dystans | | | | |
| 2 | 4 | 3916004R | Podkładka | | | | |
| 3 | 4 | 3801002R | Śruba | | | | |
| 4 | 1 | 61070039R | Sprężyna | | | | |
| 5 | 1 | 61070038R | Zabierak | | | | |
| 6 | 1 | 61070053A | Zabierak sprzęgła | | | | |
| 7 | 1 | 61070017BR | Koło magnesowe | | | | |
| 8 | 1 | 3980012 | Nakrętka | | | | |
| 9 | 2 | 006000085 | Śruba | | | | |
| 10 | 2 | 3819005R | Podkładka | | | | |
| 11 | 2 | 61070012R | Przewód | | | | |
| 12 | 1 | 094600097AR | Kapturek swiecy zaplonowej | | | | |
| 13 | 1 | 56510066R | Cewka zapłonowa | | | | |
| 14 | 1 | 61070009 | Stojak | | | | |
| 15 | 3 | 3801013R | Sruba | | | | |
| 16 | 1 | 3073021AR | Wąż | | | | |
| 17 | 1 | 094600451 | Podkładka | | | | |
| 18 | 1 | 61070035BR | Koło linowe rozrusznika | | | | |
| 19 | 1 | 61070036R | Sprezyna | | | | |
| 20 | 1 | 61070019AR | Linka rozrusznika | | | | |
| 21 | 1 | 093500397R | Uchwyt | | | | |
| 22 | 1 | 072700089R | Tulejka | | | | |
| 23 | 1 | 61072008CR | Rozrusznik kpl. | | | | |
| 24 | 7 | 3918005R | Podkladka | | | | |
| 25 | 3 | 3819006R | Podkladka | | | | |
| 26 | 1 | 4161211R | Tuleja | | | | |
| 27 | 1 | 4098377R | Tasma | | | | |
| 28 | 1 | 61070011AR | Zawór odpowietrznika | | | | |
| 29 | 2 | 61290088R | Wąż | | | | |
| 30 | 1 | 094600450R | Filtr paliwa | | | | |
| 31 | 1 | 61070006R | Uszczelka | | | | |
| 32 | 1 | 61070079AR | Korek kpl. | | | | |
| 33 | 1 | 61070105BR | Zbiornik | | | | |
| 34 | 1 | 3801013R | Sruba | | | | |
| 35 | 1 | 61010021 | | | | | |
| 36 | 1 | | | | | | |
| 37 | 2 | | | | | | |
| 38 | 2 | | | | | | |
| 39 | 1 | | | | | | |
| 40 | 1 | | | | | | |
| 41 | 1 | | | | | | |
| 42 | 4 | | | | | | |
| 43 | 1 | | | | | | |
| 44 | 1 | | | | | | |
| 45 | 1 | | | | | | |

pierścień dystansowy

| Znak | Ilosc | Kod artykul | Opis | Waznosc od | Waznosc do | Notakt | Biuletyny |
|---|---|---|---|---|---|---|---|
| 46 | 1 | 61070090R | Sprezyna | | | | |
| 47 | 1 | 61070091AR | Sprzęgło | | | | |
| 48 | 1 | 61070090R | Sprezyna | | | | |

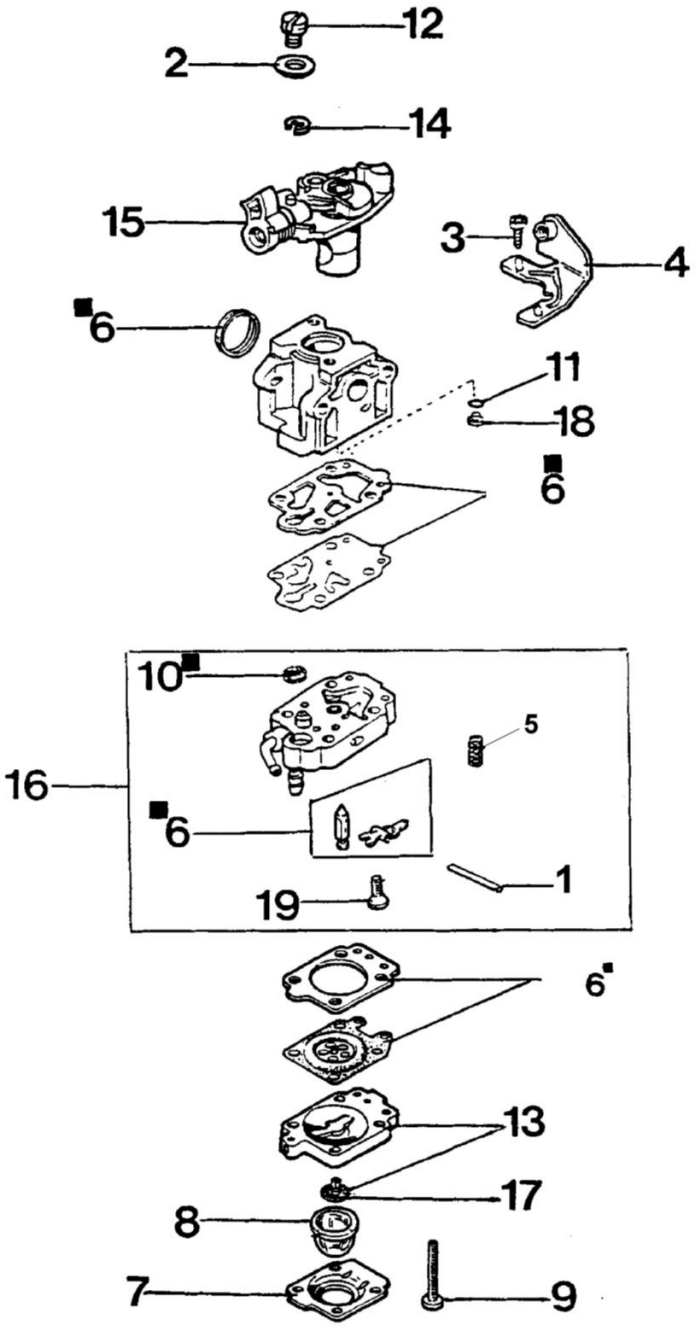


6 ■ KIT RIPARAZIONE
REPAIR KIT

| Znak | Ilosc | Kod artykul | Opis | Waznosc od | Waznosc do | Notakt | Biuletyny |
|---|---|---|---|---|---|---|---|
| 1 | 1 | 003300201 | Wałek napędowy | | | | |
| 2 | 1 | 2318703 | Podkładka | | | | |
| 3 | 1 | 2318580 | Śruba | | | | |
| 4 | 1 | 2318813 | Mocowanie | | | | |
| 5 | 1 | 2318568 | Sprężyna | | | | |
| 6 | 1 | 2318674 | Zestaw naprawczy | | | | |
| 7 | 1 | 2318571 | Pokrywa | | | | |
| 8 | 1 | 2318572 | Pompa paliwa | | | | |
| 9 | 4 | 2318585 | Śruba | | | | |
| 10 | 1 | 003300204 | Filtr paliwa | | | | |
| 11 | 1 | 2318701 | O-ring | | | | |
| 12 | 1 | 2318577 | Nakrętka regulacyjna | | | | |
| 13 | 1 | 2318570 | Korpus pompy | | | | |
| 14 | 1 | 2318189 | Pierścień | | | | |
| 15 | 1 | 2318814 | Zawór | | | | |
| 16 | 1 | 2318811 | Korpus pompy | | | | |
| 17 | 1 | 2318592 | Zawór | | | | |
| 18 | 1 | 2318812 | Dysza | | | | |
| 19 | 1 | 2318569 | Śruba | | | | |

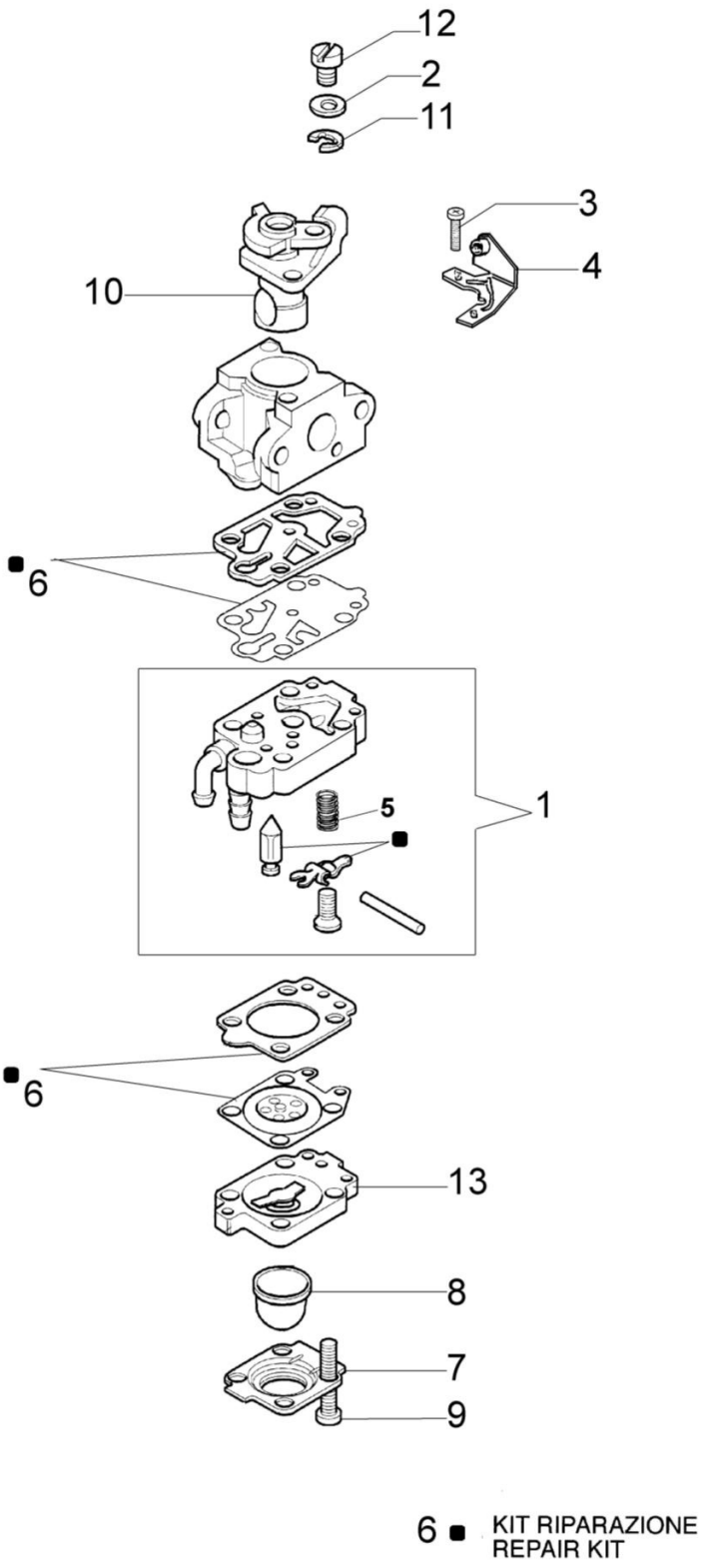
12
2
11
3
4
10
6
5
1
6
13
8
7
9
6 ■ KIT RIPARAZIONE
REPAIR KIT

| Znak | Ilosc | Kod artykul | Opis | Waznosc od | Waznosc do | Notakt | Biuletyny |
|---|---|---|---|---|---|---|---|
| 1 | 1 | 2318815 | Korpus pompy kpl. | | | | |
| 2 | 1 | 2318703 | Podkładka | | | | |
| 3 | 1 | 2318580 | Śruba | | | | |
| 4 | 1 | 2318813 | Mocowanie | | | | |
| 5 | 1 | 2318568 | Sprężyna | | | | |
| 6 | 1 | 2318674 | Zestaw naprawczy | | | | |
| 7 | 1 | 2318571 | Pokrywa | | | | |
| 8 | 1 | 2318572 | Pompa paliwa | | | | |
| 9 | 4 | 2318585 | Śruba | | | | |
| 10 | 1 | 2318814 | Zawór | | | | |
| 11 | 1 | 2318189 | Pierścień | | | | |
| 12 | 1 | 2318577 | Nakrętka regulacyjna | | | | |
| 13 | 1 | 2318570 | Korpus pompy | | | | |

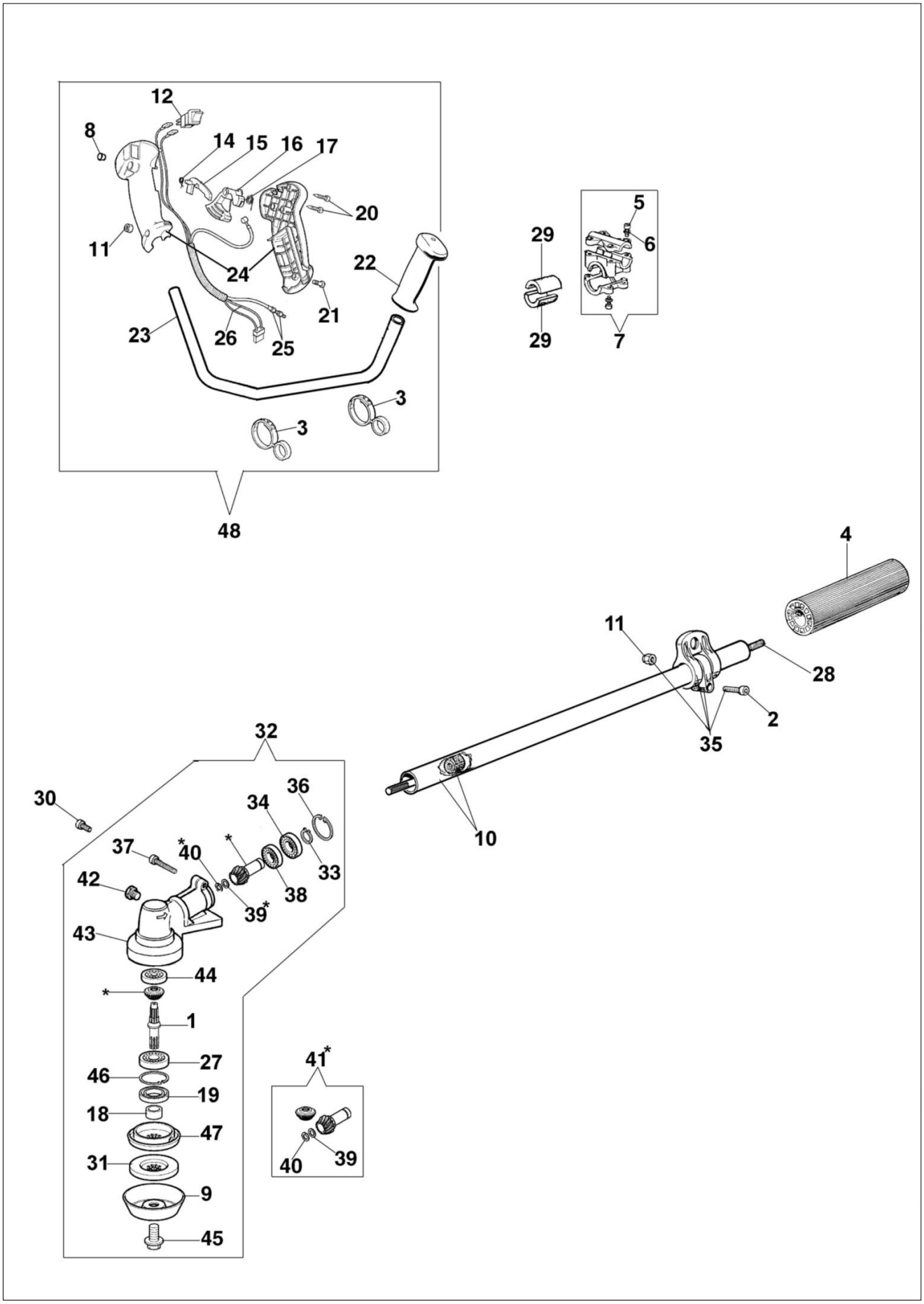
12
8
14
15
16
17
20
11
24
22
21
23
26
25
3
3
48
29
29
5
6
7
4
11
28
2
35
10
32
30
36
34
37
40*
*
33
42
38
39*
43
44
*
1
27
46
19
18
47
31
9
45
41*
40
39

# Ilustracja Napęd

| Znak | Ilosc | Kod artykul | Opis | Waznosc od | Waznosc do | Notakt | Biuletyny |
|---|---|---|---|---|---|---|---|
| 1 | 1 | 61040106A | Sworzeń | | | | |
| 2 | 1 | 3801015R | Sruba | | | | |
| 3 | 1 | 61170132R | Przelotka | | | | |
| 4 | 1 | 4160262R | Pokrętło | | | | |
| 5 | 4 | 3801013R | Sruba | | | | |
| 6 | 4 | 3819006R | Podkladka | | | | |
| 7 | 1 | 074000183AR | Zacisk | | | | |
| 8 | 1 | 61070056 | Korek | | | | |
| 9 | 1 | 4100456R | Osłona | | | | |
| 10 | 1 | 4160011R | Oslona Ø26 | | | | |
| 11 | 4 | 3914003R | Nakretka | | | | |
| 12 | 1 | 2317021R | Wyłącznik | | | | |
| 14 | 1 | 4138360R | Sprężyna | | | | |
| 15 | 1 | 4174246AR | Dźwignia | | | | |
| 16 | 1 | 4174245CR | Dźwignia gazu | | | | |
| 17 | 1 | 4138361R | Sprężyna | | | | |
| 18 | 1 | 61040066R | Dystans | | | | |
| 19 | 1 | 3050018R | Pierscien uszczelniajacy | | | | |
| 20 | 3 | 3960029 | Śruba | | | | |
| 21 | 2 | 3801016R | Sruba | | | | |
| 22 | 1 | 61040140R | Pokrętło | | | | |
| 23 | 1 | 4174187ER | Uchwyt | | | | |
| 24 | 1 | 61040131R | Uchwyt | | | | |
| 25 | 1 | 61070084 | Linka gazu | | | | |
| 26 | 1 | 4191070A | Przewód | | | | |
| 27 | 1 | 3034012R | Lozysko | | | | |
| 28 | 1 | 62030042R | Wałek napędowy | | | | |
| 29 | 2 | 072700082R | Amortyzator | | | | |
| 30 | 1 | 3901008R | Śruba | | | | |
| 31 | 1 | 4179089R | Kolnierz | | | | |
| 32 | | | | | | | |

| Znak | Ilosc | Kod artykul | Opis | Waznosc od | Waznosc do | Notakt | Biuletyny |
|---|---|---|---|---|---|---|---|
| 47 | 1 | 61040145R | Piasta | | | | |
| 48 | 1 | 61072025R | Uchwyt | | | | |

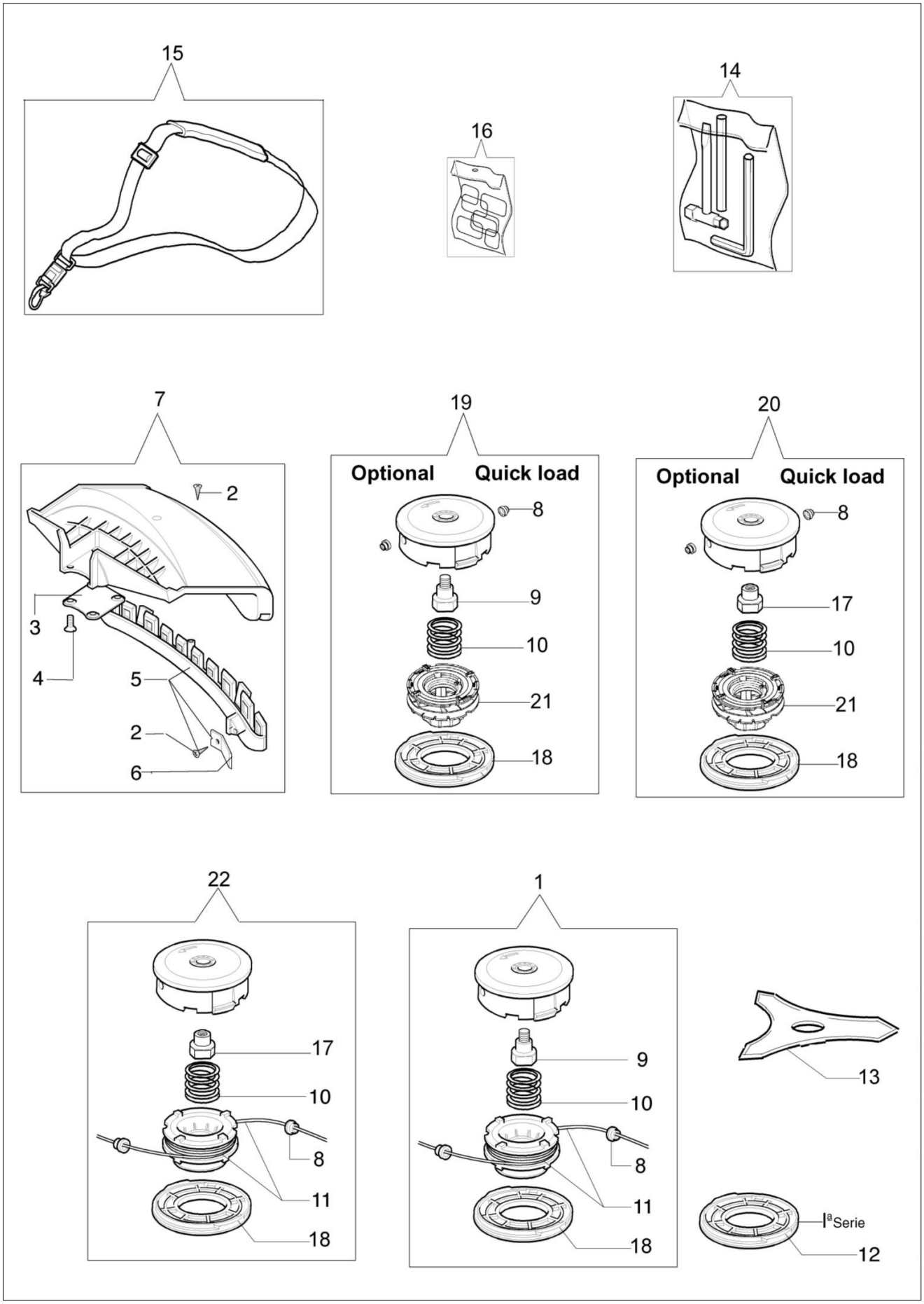
15
16
14
7
2
3
4
5
2
6
19
Optional
Quick load
8
9
10
21
18
20
Optional
Quick load
8
17
10
21
18
22
17
10
8
11
18
1
9
10
8
11
18
13
Ia Serie
12

| Znak | Ilosc | Kod artykul | Opis | Waznosc od | Waznosc do | Notakt | Biuletyny |
|---|---|---|---|---|---|---|---|
| 1 | 1 | 61459101 | Glowica Tap&Go | | | | |
| 2 | 1 | 3960040R | Sruba | | | | |
| 3 | 1 | 4174278R | Plytka | | | | |
| 4 | 4 | 3802004DR | Sruba | | | | |
| 5 | 1 | 4179113AR | Osłona dodatkowa | | | | |
| 6 | 1 | 4174275R | Ostrze | | | | |
| 7 | 1 | 61280333 | Osłona tarczy | | | | |
| 8 | 2 | 4199005AR | Tulejka | | | | |
| 9 | 1 | 4199008B | Wkładka (male) | | | | |
| 10 | 1 | 4199004 | Sprężyna | | | | |
| 11 | 1 | 4199052 | Szpula żyłki | | | | |
| 12 | 1 | 4199026A | Pokrywa | | | | |
| 13 | 1 | 4095673BR | Tracza 3 noże | | | | |
| 14 | 1 | 61052031R | Zestaw narzędzi | | | | |
| 15 | 1 | 4160463AR | Pas nosny | | | | |
| 16 | 1 | 61072027 | Zestaw etykiet | | | | |
| 17 | 1 | 61110076 | Wkładka (female) | | | | |
| 18 | 1 | 4199046 | Pokrywa | | | | |
| 19 | 1 | 63129007 | Głowica żyłkowa Load & Go | | | | |
| 20 | 1 | 63129007 | Głowica żyłkowa Load & Go | | | | |
| 21 | 1 | 4199049 | Szpula żyłki | | | | |
| 22 | 1 | 61459101 | Glowica Tap&Go | | | | |

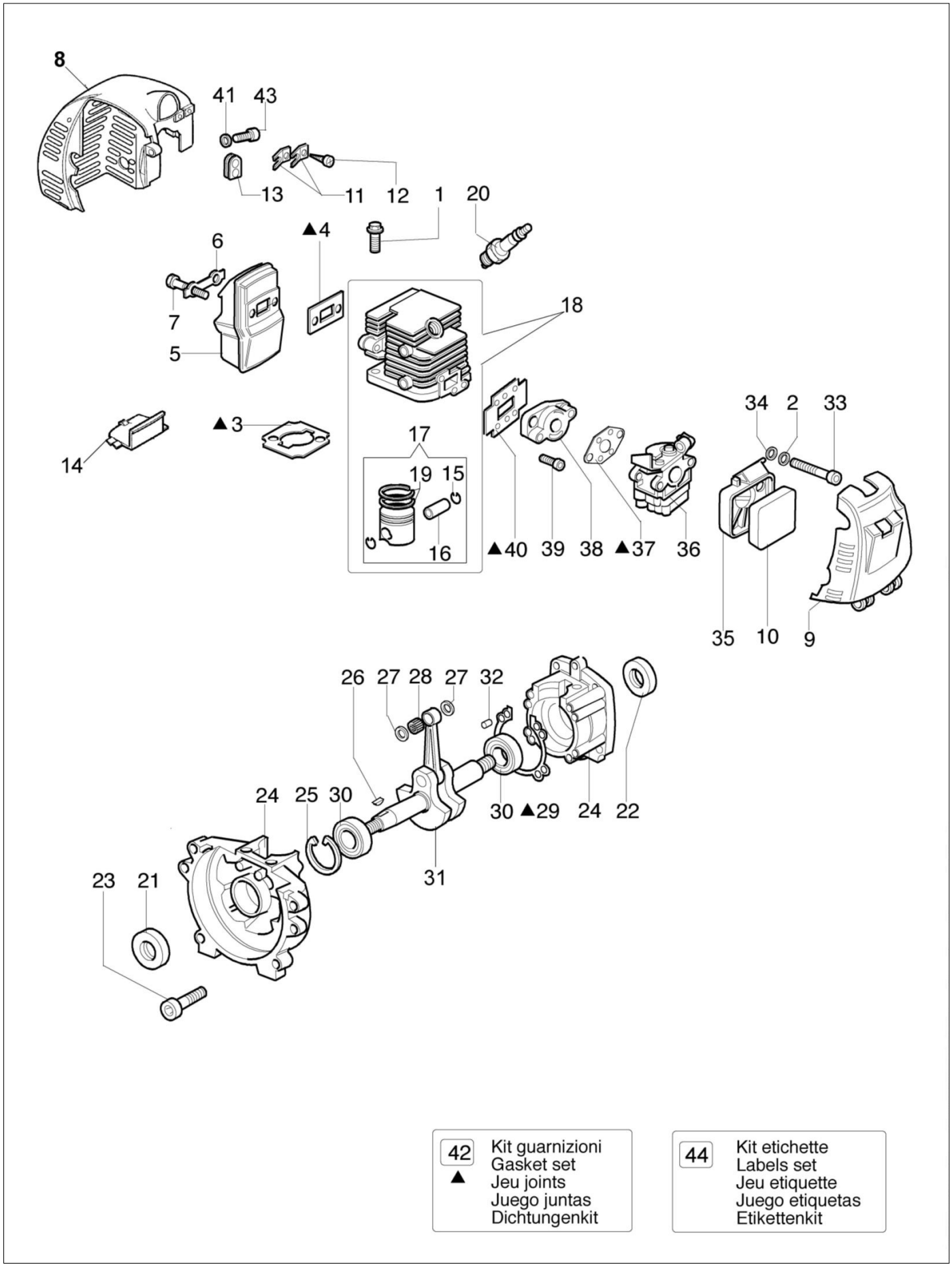
8
41
43
13
11
12
1
20
▲4
6
7
5
18
14
▲3
17
19
15
16
34
2
33
▲40
39
38
▲37
36
35
10
9
26
27
28
27
32
24
25
30
30
▲29
24
22
23
21
31
42
▲
Kit guarnizioni
Gasket set
Jeu joints
Juego juntas
Dichtungenkit
44
Kit etichette
Labels set
Jeu etiquette
Juego etiquetas
Etikettenkit

# Ilustracja Silnik

| Znak | Ilosc | Kod artykul | Opis | Waznosc od | Waznosc do | Notakt | Biuletyny |
|---|---|---|---|---|---|---|---|
| 1 | 2 | 61070060 | Śruba | | | | |
| 2 | 2 | 3833073R | Podkladka | | | | |
| 3 | 1 | 61070059 | Uszczelka | | | | |
| 4 | 1 | 61070033 | Uszczelka | | | | |
| 5 | 1 | 58040140AR | Tłumik | | | | |
| 6 | 1 | 61070055R | Płytka | | | | |
| 7 | 2 | 3806027 | Śruba | | | | |
| 8 | 1 | 61070026BR | Pokrywa | | | | |
| 9 | 1 | 61070002 | Pokrywa | | | | |
| 10 | 1 | 61070005R | Filtr powietrza | | | | |
| 11 | 2 | 4191069BR | Płytka | | | | |
| 12 | 2 | 3960030R | Śruba | | | | |
| 13 | 1 | 072700036A | Przelotka | | | | |
| 14 | 1 | 61070027A | Blokada | | | | |
| 15 | 2 | 61070067 | Pierścień | | | | |
| 16 | 1 | 61070066 | Pierścień tłokowy | | | | |
| 17 | 1 | 61070107 | Tłok kpl. | | | | |
| 18 | 1 | 61070072A | Cylinder kpl. Ø34 | | | | |
| 19 | 1 | 61070065R | Pierścień tłokowy | | | | |
| 20 | 1 | 3055104R | Swieca zaplonowa | | | | |
| 21 | 1 | 61070075 | Pierścień uszczelniający | | | | |
| 22 | 1 | 61070074 | Pierścień uszczelniający | | | | |
| 23 | 4 | 61070063 | Śruba | | | | |
| 24 | 1 | 61070061R | Skrzynia korbowa | | | | |
| 25 | 1 | 3025019 | Pierscien | | | | |
| 26 | 1 | 61070070 | | | | | |
| 27 | 2 | 61070068 | | | | | |
| 28 | 1 | 61070076 | | | | | |
| 29 | 1 | 61070062 | | | | | |
| 30 | 2 | 3034009R | | | | | |
| 31 | 1 | 61070069 | | | | | |
| 32 | 3 | 61070073 | | | | | |
| 33 | 1 | 61052009BR | | | | | |
| 34 | 2 | 61040020 | | | | | |
| 35 | 1 | 61070003ER | | | | | |
| 36 | 1 | 2318900R | | | | | |
| 36 | 1 | 2318900R | | | | | |
| 37 | 1 | 4161438 | | | | | |
| 38 | 1 | | | | | | |
| 39 | 2 | | | | | | |
| 40 | 1 | | | | | | |
| 41 | 2 | | | | | | |
| 42 | 1 | | | | | | |
| 43 | 2 | | | | | | |
| 44 | 1 | | | | | | |